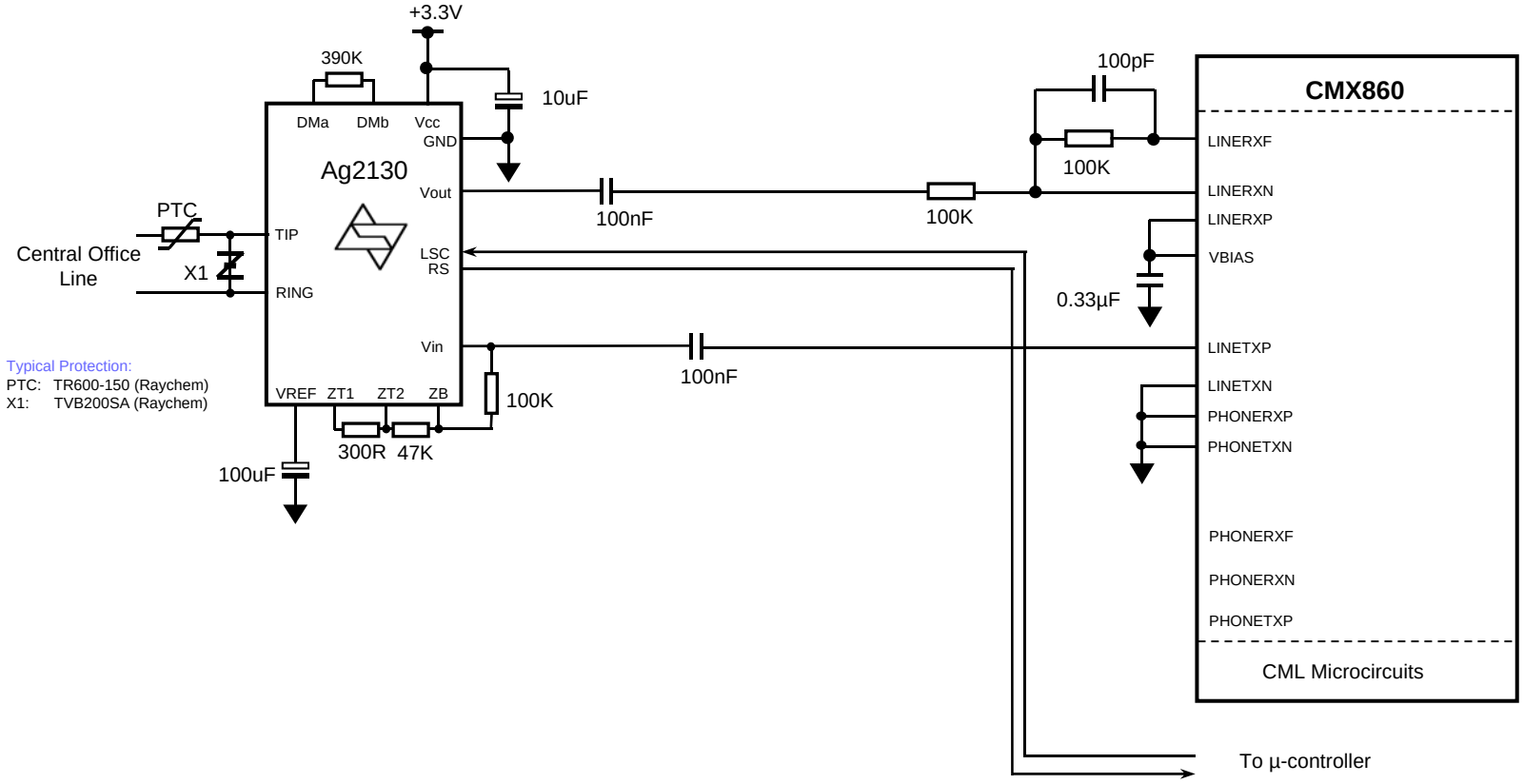Using Ag2120 with CMX860