# Interfacing Ag1170 to CMX865A and TWL3025/CAL2M000

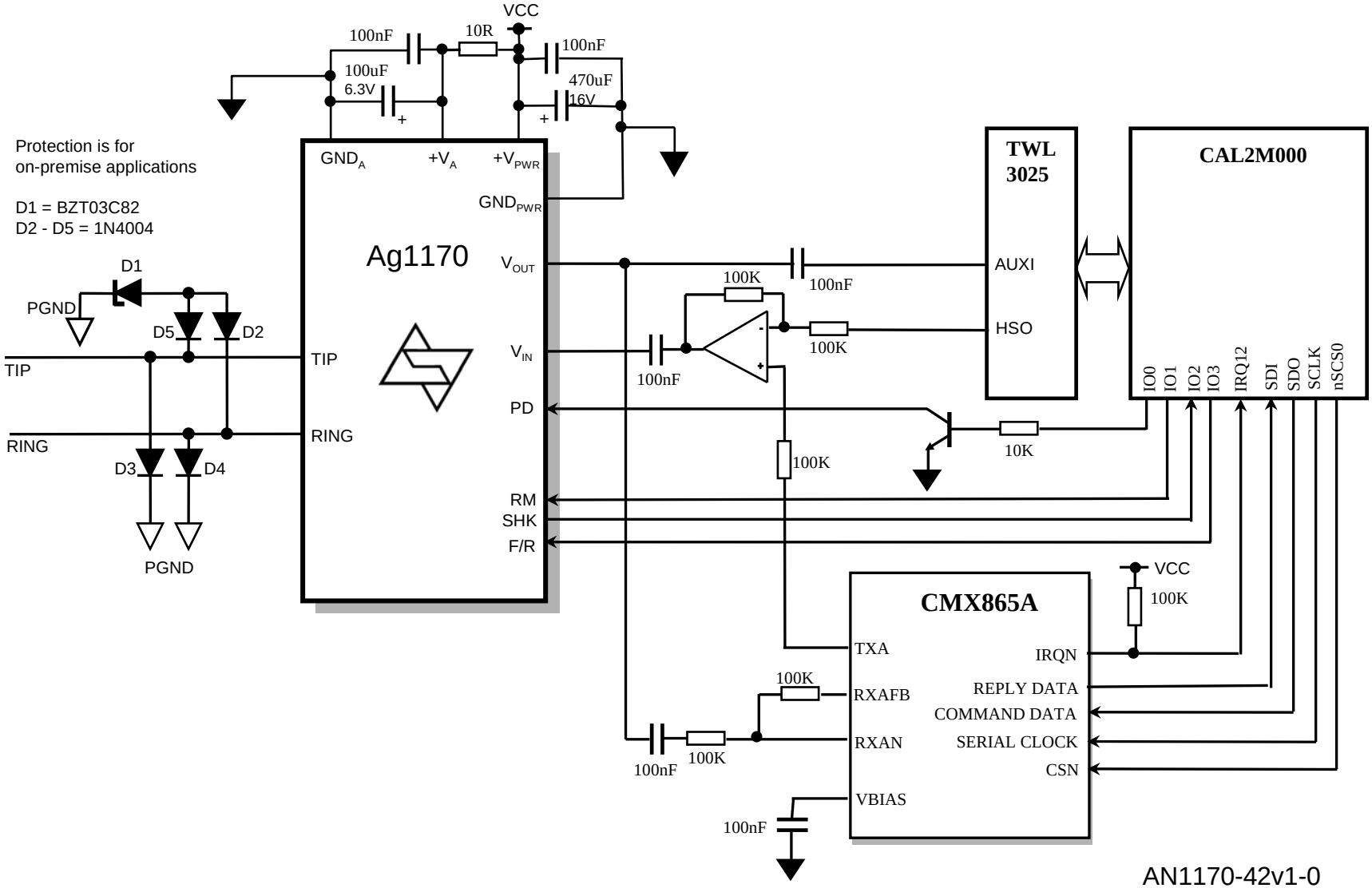


AN1170-42v1-0